INSTALLATION INSTRUCTIONS

93150-GL

15A 3-Way Decorator Switch With Guide Light

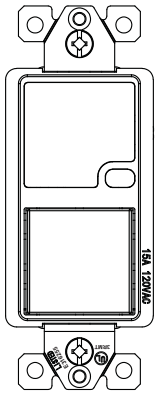

SPECIFICATIONS

Rating.....15 Amp, 120VAC
Wire Terminals.....#14--#12 AWG
Operating Temperature..... -4 to 140°F (-20 to 60°C)
Dimension .....2-3/4"×1-1/2"×1-5/16"

DESCRIPTION

The 93150-GL is a single pole/3-way light switch with a built-in LED guide light. A daylight sensor automatically controls the guide light and turn on when a room becomes dark. It is ideal for hallways, kitchens, nurseries and more.

FEATURES

- Single pole/3-Way, 15A Decorator Switch
- Guide Light with Daylight sensor
- Replaces a standard switch or 3-way
- Clamp-Type wire terminals are designed for easy installation from the back
- Lamp life rated 50,000 hours
- Neutral wire required
- UL Listed

WARNING

Turn the POWER OFF at the circuit breaker before installing the switch.

Read and understand these instructions before installing. This device is intended for installation in accordance with the National Electric Code and local regulations. It is recommended that a qualified electrician performs this installation. Make sure to turn off the circuit breaker or fuse(s) and make sure power is off before wiring the device.

Use copper wire only.

WIRING DIRECTIONS

Turn off the power at the circuit breaker. Identify the HOT, NEUTRAL, TRAVELER and GROUND wires in the wall box. Insert wires into the terminal holes on the back side of the switch, then tighten the terminal screws to clamp wires in place.

- Insert the BLACK (LINE) wire into COM terminal
- Insert the RED (TRAVELER) wire into Traveler terminal
- Insert the BLACK (TRAVELER) wire into Load/Traveler terminal
- Insert both the WHITE wires into the NEUTRAL terminal (With silver screw)
- Clamp the two GREEN/BARE (COPPER) wires together, then loop one ground wire onto the GR terminal (Green screw)

Guide-light with standard 3-way switch

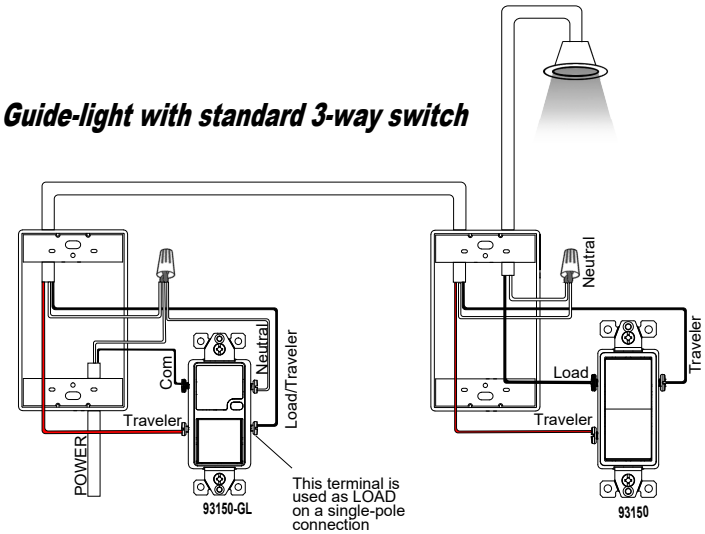

Two Guide-light Switches

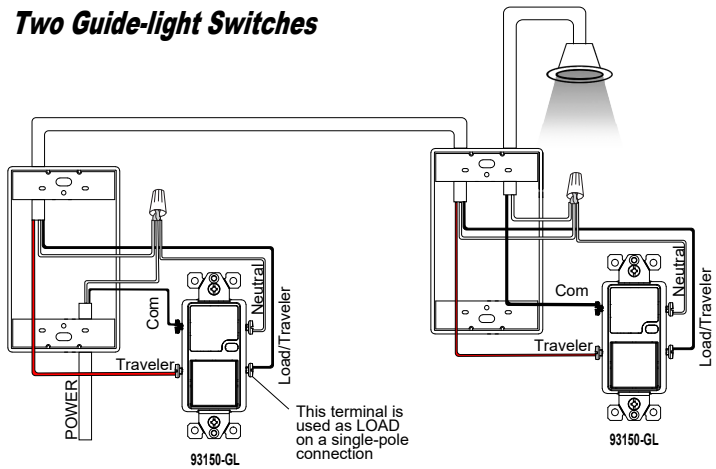

OPERATING INSTRUCTIONS

- Guide light will automatically turn on when the ambient light level is below device's threshold

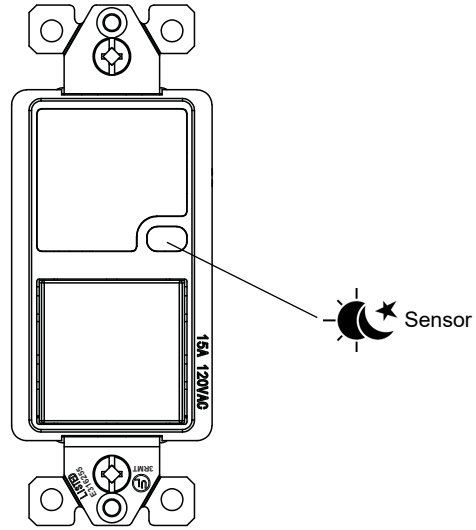

WARRANTY INFORMATION

This device is warranted to be free of material and workmanship defects for 2 years from the date of purchase. Original receipt or proof of purchase from an authorized retailer must be presented upon warranty claim. ALL claims must be verified and approved by Enerlites, Inc. Warranties from other Enerlites products may vary. This warranty is nontransferable and does not cover normal wear and tear or any malfunction, failure, or defect resulting from misuse, abuse, neglect, alteration, modification, or improper installation. To the fullest extent permitted by the applicable state law, Enerlites shall not be liable to the purchaser or end user customer of Enerlites products for direct, indirect, incidental, or consequential damages even if Enerlites has been advised of the possibility of such damages. Enerlites' total liability under this or any other warranty, express or implied, is limited to repair, replacement or refund. Repair, replacement or refund are the sole and exclusive remedies for breach of warranty or any other legal theory.

© 2022 Enerlites Inc. CA, U.S.A.
WWW.ENERLITES.COM
0906220207